ASSEMBLY INSTRUCTION

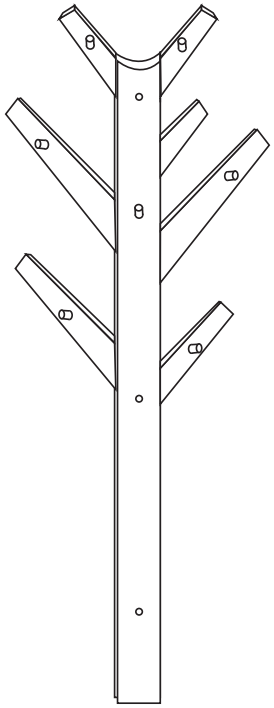

①X1

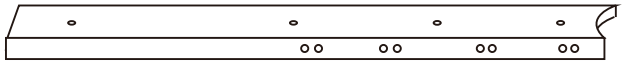

②X1

③X1

④X1

⑤X1

⑥X1

⑦X1

⑧X1

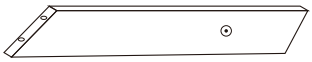

⑨X7

⑩X3

Ⓐ X4

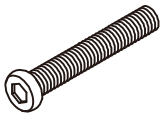

Ⓑ X3

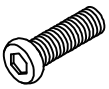

Ⓒ X7

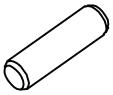

Ⓓ X16

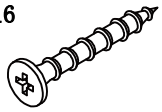

Ⓔ X1

1

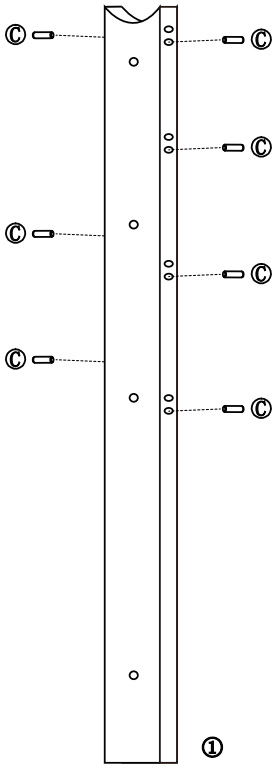

2

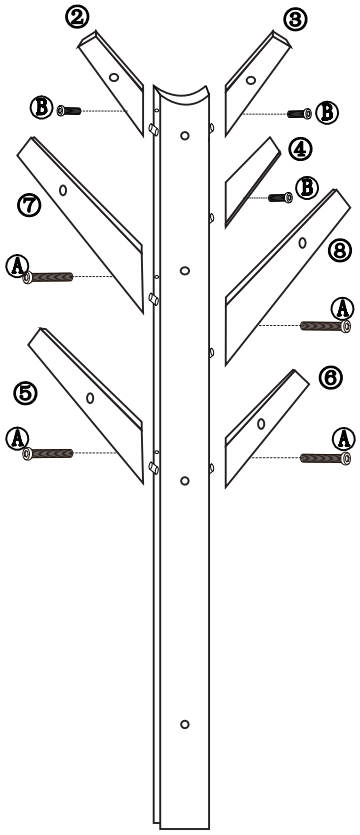

3

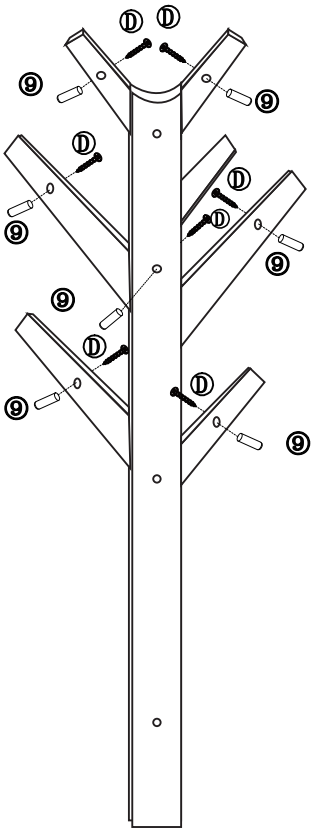
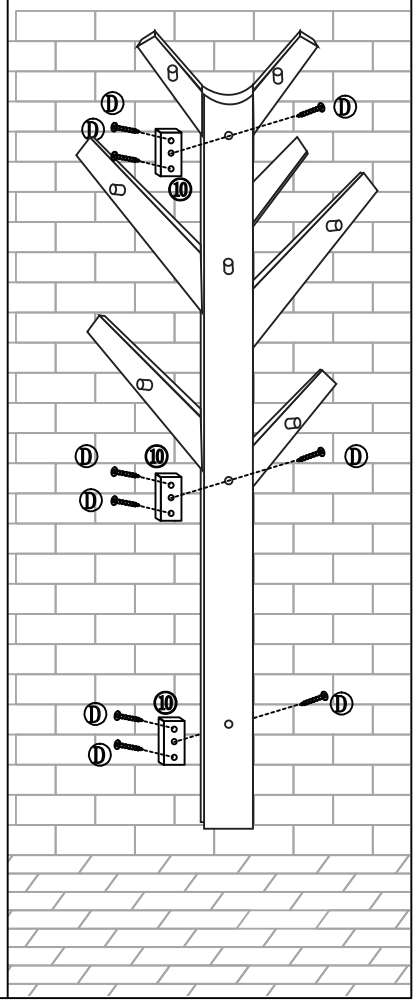
4